NUTRITION AND FERTILIZATION

Original Author: Keith Campbell

Revised by the Montana Nursery and Landscape Association 2002

Helen Atthowe, Nick Engler, Mary Keck

2018 Mac Burgess

With today's focus on environmental concerns, plant professionals must understand fertilizer materials, their proper uses, and their effects on plant growth *and* the environment. Although an individual home site or landscape makes only a small contribution to the general water pollution problem, the cumulative effects of all residences and public landscapes are greater than those of agricultural production. Potential environmental problems are increased in urban areas because runoff and drainage water often move over hard surfaces and through storm sewers without being filtered through the soil. Nitrogen and Phosphorus are both implicated in environmental impacts to fisheries in both marine and freshwater aquatic ecosystems.

What Are Essential Plant Nutrients?

There are 17 elements that plants require for survival, growth, and normal development. These elements are often referred to as essential elements or nutrients. See Table 3-1.

Plants obtain three essential elements through air and water. They are carbon, oxygen and hydrogen. These three elements combine to form the basic building blocks of living cells, and are found in greater abundance than all other elements combined in plant tissues. Carbon is obtained by plants from the air in the form of carbon dioxide gas. Oxygen and hydrogen are supplied by water. Through the process of photosynthesis, these three elements are combined to form sugars, which are then used to form cellulose, starch, and virtually all other structural components of plant cells.

In addition to the three elements that plants obtain through air and water, 14 nutrients are provided by soil, fertilizers, and dissolved salts or electrolytes in irrigation water. These nutrients are shown in Table 3-1. Six of the 13 elements are listed as "macronutrients" and seven as "micronutrients". Carbon, hydrogen, and oxygen can also be considered macronutrients. The terms macro- and micronutrients simply refer to the relative concentration of the nutrients in plant tissues. Macronutrients are found in relatively large amounts in cells, with their concentrations generally given as percentages of total tissue weight. For example, most plant tissues contain about 1.5 to 3% nitrogen, by weight. Macronutrients are typically taken up by plants and removed with plant harvest or pruning in such quantities that the amount present in soils may need active and ongoing management.

Micronutrients (often referred to as trace elements) are just as essential as macronutrients for plant growth and development, but are needed in lower concentrations. Micronutrients are generally measured in parts per million (ppm). For example, foliar analyses typically show iron concentrations near 100 parts per million (ppm). To convert from ppm to percentages, remember that 10,000-ppm equals 1.0%. Micronutrients are generally taken up in such small quantities that if soils have adequate supplies and availability they likely will continue too for a long time, barring dramatic changes in pH.

In addition to the 17 essential nutrients, plants also absorb and incorporate into their tissues sodium (Na) and Silicon (Si). Because plants can complete their lifecycles in the complete absence of these nutrients, they are not considered essential nutrients. Sodium and silicon are called functional plant nutrients. New research indicates that silicon, in particular, plays a role in plant disease defense mechanisms.

In nature, plants obtain all the nutrients they need from air, water, and soil. As plants grow, they accumulate nutrients in their tissues. After plants (or animals which eat plants) die, the nutrients are released from the decaying tissues and are gradually taken up by other plants. In this way, soil fertility is maintained and nutrients can be considered to cycle.

In managed settings, soil fertility is lost when plants that have taken up soil nutrients are harvested and removed from the site. Erosion of soil particles and leaching of soluble nutrients by irrigation water or excess rain are other causes of declining soil fertility. Many urban soils have had the native topsoil removed as well. As soil fertility decreases, plant performance declines. Typical symptoms of poor fertility include yellowish, off-colored plants; scorched, small, and/or deformed leaves; poor survival; low vigor; and poor flowering or fruit set. As plants become stressed due to lack of nutrients, they become more susceptible to pests, diseases, and weed competition.

Nitrogen, phosphorus, and potassium are the three plant nutrients that are most commonly deficient in soils, and are referred to as primary plant macronutrients. Calcium, magnesium, and sulfur are also essential macronutrients, but are less likely than N, P, or K to be deficient and are referred to as secondary plant macronutrients.

Nutrient Descriptions

Macronutrients

Nitrogen

Nitrogen is a component of many important molecules including chlorophyll, proteins, enzymes, and DNA. These compounds regulate literally every biochemical reaction in all living things. Ammonium (NH_4^+) and nitrate (NO_3^-) are the two plant available forms of nitrogen, and both are commonly used as components of fertilizer salts. Ammonium is continuously being transformed into nitrate by soil microorganisims, so nitrate is the only plant available form of nitrogen usually analyzed in soil tests. While nitrogen is seldom found in the minerals from which soils are formed, it is abundant in the organic matter that makes up 3-5% of most soils. Organic nitrogen is constantly being transformed to ammonium and then to nitrate by naturally occurring soil microbes. The activity of these microbes depends on soil temperature, aeration, moisture, and the availability of nutrients for the microbes. The plant-available forms of nitrogen are easily lost from soils by leaching (downward movement of nitrate through soil with water), denitrification (conversion of nitrate to inert N_2 gas), and volatilization (conversion of soluble ammonium to ammonia gas). cause nitrogen is so mobile and reactive, nitrogen is the most commonly deficient plant nutrient and often must be managed regularly. Because nitrogen is highly mobile in plants, deficiency symptoms tend to show up on older leaves first. Nitrogen-deficient plants are typically yellow, spindly, and lack vigor. Yellowing and tip scorch of older leaves may occur. Too much nitrogen causes excessive growth, very dark green leaves and stems, and reduces flowering and fruit set. Fruits are often large, soft, and poorly colored. The availability of nitrogen also affects the uptake and utilization of other nutrients.

Phosphorus

Plants derive all the energy that they need to survive and grow from sunlight. Sunlight energy cannot be used directly, however, but is stored in the chemical compound adenosine triphosphate (ATP), which provides energy to the cells. As the name implies, Phosphorus is a key element ATP and related energy-carrying compounds. Phosphorus is also found in the DNA that regulates everything that occurs in a plant. Phosphorus is involved in cell division, photosynthesis, blooming, seed development, and plant maturation. If phosphorus is deficient, adding phosphorus will stimulate root growth, so phosphorus deficiency can cascade into other nutrient deficiencies by limiting root growth.

Phosphorus is the second most commonly limiting plant nutrient. The plant available forms of P are orthophosphate (PO_4^{-3}) and the related phosphate ions $H_2PO_4^-$ and HPO_4^{-2} which occur in different proportions depending on soil pH. Phosphorus deficiency is common both in soils genuinely lacking in phosphorus and because phosphorus can be fixed, or made unavailable, in both high and low pH soils. In semiarid climates where soils are typically of high pH, most soils contain abundant phosphorus in the form of insoluble calcium phosphate compounds. Like nitrogen, but to a lesser extent, phosphorus is a component of soil organic matter and can be made available by microbial activity. For historical reasons amounts of P in fertilizers and soil tests both are expressed as if P occurred in the form of the compound P_2O_5. Although this compound doesn't exist in soils or in plants, most fertilizer labels, soil tests and soil test interpretation guidelines are consistent so there is rarely any practical need convert between pure P and P_2O_5 amounts.

Deficiency symptoms, which affect older tissues first, include stunting and red or purple discoloration of stems, petioles, and leaves. Root development may be restricted, along with flowering and seed development. Plant maturation can be delayed. Purple color is not always a sign of phosphorus deficiency, however. In soils that have been heavily amended with manure, excessive P is common, and can result in inadequate uptake of several micronutrients. Because phosphorus can be a source of water pollution, and because many residential lawns have adequate P, laws in many states require that general purpose fertilizers marketed to homeowners for use on lawns do not contain phosphorus. Phosphorus fertilizers should be used in landscaping only in documented cases of soil deficiency.

Table 3-1. Essential elements, their sources, and typical concentrations in dry plant tissues

MACRONUTRIENTS	Percentage	ppm
Air and Water		
Carbon (C)	45	450,000
Oxygen (O)	45	450,000
Hydrogen (H)	6	60,000
Soil and Fertilizers		
Nitrogen (N)	1.5	15,000
Potassium (K)	1.0	10,000
Calcium (Ca)	0.5	5,000
Phosphorus (P)	0.2	2,000
Magnesium (Mg)	0.2	2,000
Sulfur (S)	0.1	1,000

MICRONUTRIENTS Soil and Fertilizers	Percentage	ppm
Iron (Fe)	0.01	100
Chlorine (Cl)	0.01	100
Manganese (Mn)	0.005	50
Zinc (Zn)	0.002	20
Boron (B)	0.002	20
Copper Cu)	0.0006	6
Nickel (Ni)	0.0001	1
Molybdenum (Mo)	0.00001	0.1

Table 3-1 modified from Plant Physiology - 2nd Ed. 1978. Salisbury and Ross.

Potassium

Potassium is involved in the uptake, storage, and utilization of water, as well as controlling stomata, the pores in leaves where CO_2 is taken up and water is lost. The plant available form of potassium is simply the K^+ ion. Potassium deficiency can result in wilting, even when water supplies are adequate. Potassium helps to strengthen cell walls, and is important in the proper development of strong stems, leaves, and other tissues. Potassium is involved in iron uptake and plays a part in cold acclimation and cold hardiness.

Potassium is the third most commonly limiting plant nutrient, occurring most commonly on acidic soils and sandy soils with low cation exchange capacity. Deficiency symptoms include small, necrotic spots and marginal scorch on leaves, weak stems, and poor root development. Potassium-deficient plants may be more susceptible to diseases. Potassium is not mobile through soils and is not considered a water pollutant. For historical reasons, amounts of K in fertilizers and soil tests both are expressed as if K occurred in the form of the compound K_2O. Although tis compound doesn't exist in soils or in plants, most fertilizer labels, soil tests and soil test interpretation guidelines are consistent so there is rarely any practical need convert between pure K and K_2O amounts.

Calcium

Calcium is an essential part of cell walls and must be present for the formation of new cells and cell membranes. Calcium is relatively immobile in plants, so deficiency symptoms first appear on younger leaves. The leaves are often small and distorted with irregular margins, necrotic spots, and tip scorch. Other deficiency symptoms typically include weak stems, poor root development, premature shedding of blossoms, poor bud development, and blossom-end rot on fruits and vegetables. Calcium is generally added to the soil as limestone, dolomite, or gypsum. Calcium availability is closely tied to soil pH, and calcium deficiency is rare in soils with reasonable pH.

Magnesium

Magnesium is the central atom in chlorophyll molecules, and is critical for photosynthesis and proper color in green plants. It is also involved as a catalyst in many biochemical reactions. Magnesium is occasionally limiting in soils. Deficiency symptoms include mottled interveinal chlorosis on the lower leaves, which develop Christmas tree-like patterns around veins. The leaf margins may curl and die. Magnesium deficiency looks similar to potassium deficiency, so a plant tissue test or soil test should be used to confirm diagnoses.

Sulfur

Sulfur is present in some of the amino acids that form proteins and enzymes. It is involved in respiration and is required for the production of at least two plant growth hormones. Sulfur deficiency is common in areas with arid climates and alkaline soils, and becoming more common in recent years since reduction of sulfur pollution from industrial sources has resulted in reduced atmospheric deposition of sulfur. Sulfur-deficient leaves are typically yellowish, with symptoms resembling nitrogen deficiency, except that sulfur is not mobile in plant tissue like nitrogen is, so sulfur deficiency symptoms are visible in new leaves.

Two forms of sulfur are used as fertilizers and soil amendments; elemental or pure sulfur, and various sulfate salts. Elemental sulfur can be used to acidify soils, typically in preparation for acid-loving plants, such as rhododendrons or blueberries. Elemental sulfur is oxidized by soil bacteria, resulting in sulfate and H^+ ions, which by definition lowers the soil pH. Sulfate sulfur (SO_4) is the form taken up by plants. Calcium sulfate (gypsum), ammonium sulfate, potassium sulfate, and sulfate of potash-magnesium, commonly called Sul-Po-Mag or Langbeinite are also common fertilizers. It is a common misconception that all sulfate fertilizers will cause soil acidification. Like any ammonium fertilizer, ammonium sulfate does cause some net soil acidification due to the conversion of the ammonium to nitrate, but his has nothing to do with the sulfate.

Gypsum, or calcium sulfate is a common soil amendment used for supplying calcium and for the reclamation of sodic soils. This works because calcium preferentially binds to soil cation exchange sites, displacing sodium, which can then be leached away with irrigation water. Gypsum does not affect soil pH in normal circumstances. Gypsum is sometimes marketed as helpful to poorly structured heavy clay soils. While it is true that calcium helps flocculate clay, more calcium is not necessarily better unless there is so much sodium present that sodium is the source of the poor soil structure.

Micronutrients

Iron

Iron is required for chlorophyll formation and the processes of photosynthesis, respiration, and symbiotic nitrogen fixation. Interveinal chlorosis or yellowing in between veins of can be symptoms of iron deficiency. Plant growth is stunted and flowering and fruit set are decreased. Iron is rarely deficient in soils, but plants can become deficient when soil conditions such as poor drainage and extreme pH make iron unavailable. For that reason, adding iron-containing fertilizers to the soil or directly to plants seldom provides a long-term solution. Either correct the soil problems that are actually causing the iron to be unavailable or plant species that are better adapted to the soil conditions present. High soil pH, cold, wet soils, and excessive phosphorus or manganese can all trigger iron chlorosis. In Idaho and Montana high-pH soil is the most probable cause of iron chlorosis. Ensuring proper water drainage, adequate irrigation, and a proper balance of soil nutrients will help to reduce iron chlorosis.

Zinc

Zinc is involved in the production of auxin (indole acetic acid), which is partially responsible for regulating plant growth. Zinc is also involved as a catalyst in several biochemical reactions, including cell division and nitrogen metabolism. Zinc deficiency is characterized by small, often cupped, leaves and very short internodes with clusters of leaves at the end (rosettes). Chlorosis may develop between the veins, gradually expanding to leave only the midrib and leaf margins green. Zinc disorders in plants are most common on highly calcareous soils (high pH). Zinc deficiencies are often treated using foliar sprays.

Manganese

Manganese is involved in the production of chloroplasts and in the process of photosynthesis. Deficiency symptoms include a mottled yellowing between green veins, although not usually as distinct as iron chlorosis. Black spots may occur between the veins and young leaves may curl upward. Manganese availability increases as soil pH decreases. Improving drainage on waterlogged soils and adding organic matter can also increase manganese availability. Few

Boron

Boron's is involved in cell wall structure, flowering, fruiting, root development, and water storage and transport. Boron deficiency symptoms vary tremendously, including heart rot of beets, stem crack of celery, drought spot of apples, and premature fruit drop. Boron deficiency commonly occurs when soil pH is very low or very high. This element is also highly soluble and can be leached out of soils by excessive irrigation. When boron is actually deficient (only a soil test will show this) add boron in the form of borax, solubor, fritted boron-glass fertilizers, or borated gypsum. Boron is needed in only small amounts (0.04 ounces of actual boron per 100 square feet of soil), and is toxic in very small amounts. Follow label directions carefully and double check your calculations when using boron fertilizers.

Chlorine

The plant available form of chlorine is the chloride ion (Cl^-), as found in common salts like sodium chloride and potassium chloride. Chlorine is involved in photosynthesis, water regulation, nitrogen uptake, and disease defense. Deficiency symptoms include wilting and mottled appearance to leaves. Chloride deficiency is more common than previously thought, but still many routine soil tests do not include chloride. The chloride ion leaches readily like nitrate does, so chloride may be present in deeper soils. For this reason, shallow soil tests like typically done in landscape settings are not useful for making chloride fertilization recommendations.

Copper

Copper is involved as a catalyst in several plant biochemical reactions. Copper is very seldom deficient. Copper may become toxic to plants even when present in the soil at small concentrations. Purple leaves can be a sign of copper toxicity, most commonly occurring on peat or muck soils. Excessive use of Bordeaux mixes or other copper-containing fungicides may create copper toxicity problems.

Molybdenum

Plants require molybdenum for nitrogen metabolism. Although molybdenum deficiencies can occur over a wide range of geographical areas, it is seldom a problem in Idaho or Montana. Symptoms include yellowing between the veins on older leaves, progressing to younger leaves. Young leaves may not become discolored, but may become severely twisted and die. On acidic soils, proper liming can help alleviate molybdenum problems.

Review

A. Give the definition for an essential element. _____

_____

B. What three materials supply plant nutrients? 1. _____ 2. _____ 3._____

C. What is a macronutrient? _____

D. List the six macronutrients supplied by the soil. 1. _____ 2. _____

3. _____ 4. _____ 5. _____ 6. _____

E. What is a micronutrient? _____

F. List the eight micronutrients supplied by the soil? 1. _____ 2. _____

3. _____ 4. _____ 5. _____ 6. _____ 7. _____ 8._____

G. List the three "primary" plant nutrients. 1. _____ 2. _____ 3. _____

H. Describe the roles and deficiency symptoms for:

1. Nitrogen _____

2. Phosphorus _____

3. Potassium _____

4. Iron _____

I. Gypsum is used for improving structure and drainage on what type of soil? Does it change soil pH? _____

_____

The Effects of Soil pH on Plant Nutrition

Many nutrients become unavailable to plants by forming non-soluble compounds. These chemical reactions are often strongly affected by the pH of the soil.. See Chapter 1 for more on soil pH. The availability of nutrients is generally a function of their solubility in the soil. Figure 3-2 shows how soil pH affects the availability of nutrients to plants.

Most plants perform reasonably well when the soil pH is between 6.0 and 7.0 (pH 7.0 is neutral). Soils pH is easily increased by application of lime materials like calcium carbonate. The amount of lime necessary to increase soil pH depends on the type of lime and soil cation exchange capacity of the soil. Lime application rates can be calculated using a Buffer pH level indicated on many soil tests and a table available from lime suppliers that considers the relative liming strength of various liming materials.

Acid-loving plants, such as rhododendrons and blueberries, grow best when the pH is between 4.2 and 5.0. Achieving these low pH levels in western U.S. soils with any amount of free calcium carbonate can be prohibitively expensive, especially at any scale larger than a single flower bed. Ammonium sulfate may be the fertilizer of choice on alkaline sites because it acidifies the soil slightly. Although ammonium sulfate will not dramatically lower soil pH, it can at least offset the gradual increase in soil pH that may occur from alkaline irrigation water.

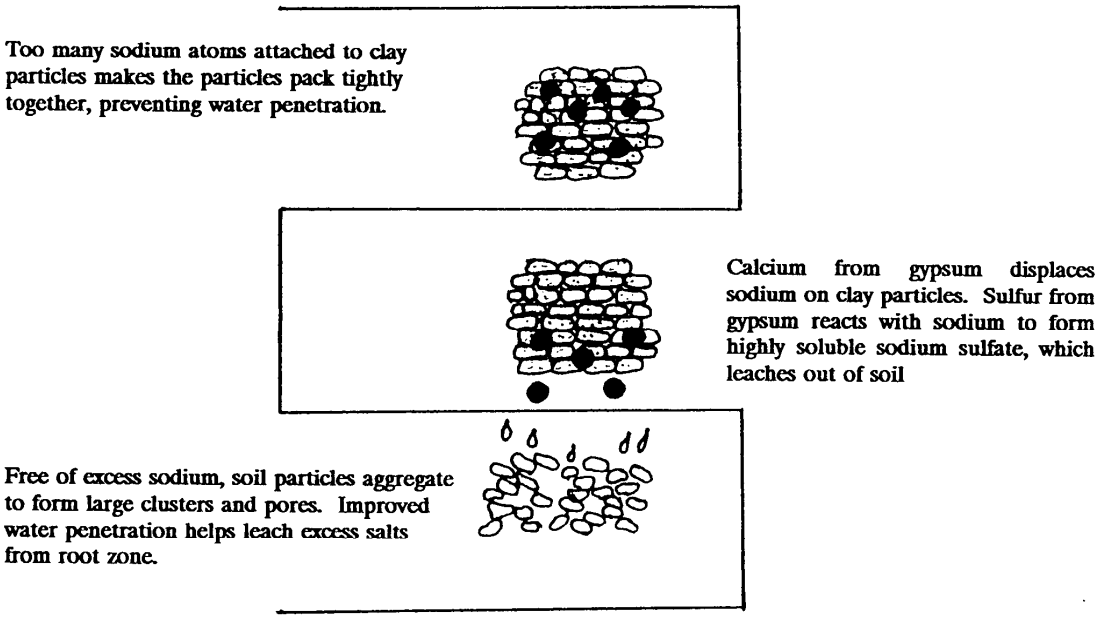

Figure 3-1. Reclamation of a sodic soil using gypsum

Figure 3-2. Effects of Soil pH on Plant Nutrient Availability. Graphs adapted from "Growing Media for Ornamental Plants" Handreck and Black. New South Wales University Press.

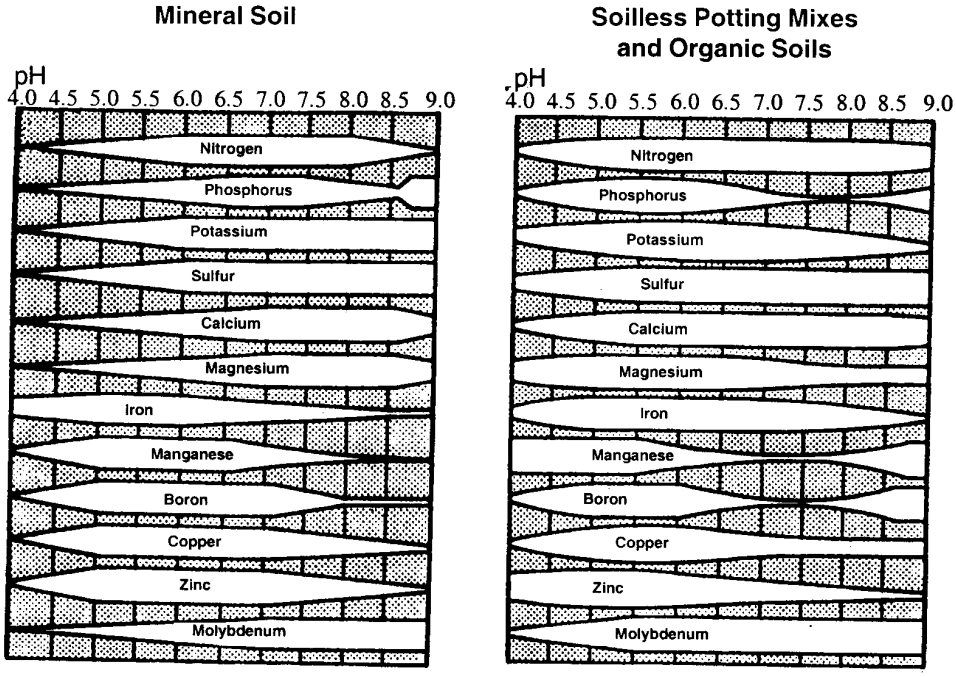

The availability of nutrients to plants is affected by the pH of the soil. In the graphs above, the more soluble a nutrient is at a particular pH, the thicker is the horizontal band representing the element. The availability of a nutrient is directly related to its solubility in the soil solution. A pH of 7.0 is neutral. Values less than 7.0 are acidic, those greater than 7.0 are alkaline. The effects of pH on nutrient availability are different for mineral and organic soils.

What Are Fertilizers and Why Are They Used?

Fertilizers are natural or synthetic materials that contain plant nutrients. With the exception of elemental sulfur, most fertilizers are made up of two or more elements combined together as salts. Most nitrogen fertilizer materials, for example, provide N either in the nitrate (NO_3^-) or ammonium (NH_4^+) form. The nitrogen is combined with oxygen or hydrogen to form a chemical compound that can be used by plants.

Most soils contain all of the nutrients essential for plant growth, but sometimes the quantities are insufficient for the plant's needs. What appears as nutrient deficiency can sometime be symptoms of other environmental stresses, such as soil compaction, poor aeration, dry or saturated soil, high or low pH, pest problems or herbicide damage. If a plant is stressed for one or more of these reasons it will usually not respond to fertilization until the underlying problems are corrected. See Chapter 7.

Excessive or unnecessary fertilization can injure roots and burn foliage. It can increase susceptibility to insects and disease in some plants. Over-fertilization reduces a plant's tolerance to environmental stresses. Increased maintenance costs and environmental contamination are additional concerns with the over use of fertilizer.

Vigorous turf, trees, and shrubs are more attractive, valuable and resistant to pests and diseases than nutrient deficient plants. Keeping landscape plants healthy and vigorous involves many cultural practices, one of which is fertilization. In order to use fertilizers effectively, identify which nutrients the plant needs (if any) and then apply the nutrients in the right amounts, at the right times.

Reading a Fertilizer Label

The law requires that commercial fertilizers be labeled. Fertilizer labels give you information on what kinds and amounts of nutrients are present. The following descriptions refer to the sample fertilizer label shown in Figure 3-3. The reverse side of the bag usually contains instructions for application, spreader settings, and precautions.

Fertilizer Grade

The fertilizer grade tells you the minimum guaranteed concentration of N, P, and K in a fertilizer. A 16-4-8 fertilizer contains, by weight, 16% nitrogen (N), 4% available phosphorus (P_2O_5), and 8% available potassium (K_2O). The first three numbers of a fertilizer grade always refer to nitrogen, phosphorus, and potassium, respectively. Sometimes a grade will contain a fourth number, which usually refers to the sulfer content, since sulfate salts of ammonium and potassium are common fertilizer . Other nutrients, if present in measurable quantities, are listed separately in the analysis.

The N, P, and K in the fertilizer described above make up only 28% of the fertilizer. The other 72% of the fertilizer's weight is made up of elements with which the nutrient elements are combined. In some cases, nutrient compounds are mixed with filler materials, such as clay granules, to make the fertilizer easier to handle.

Fertilizer Ratio

The fertilizer ratio is based upon the percentages of N, P, and K. In the example above, there is four times as much nitrogen as phosphorus and twice as much nitrogen as potassium. The ratio of the fertilizer is 4:1:2.

Guaranteed Analysis

The manufacturer guarantees that at least the stated amount of each element is present in the fertilizer. For the sample label, the fertilizer contains a guaranteed analysis of 16.0% N, 4.0% P_2O_5, 8% K_2O, 19.0% S, and 2.0% Fe.

A fertilizer analysis only shows nutrients that the manufacturer guarantees to be present at the listed concentrations. Other nutrients are commonly present in small concentrations as contaminants, but are often not listed on the label.

Nitrogen Sources - This section explains what materials the nitrogen in the fertilizer is derived from. In the example, the sources include ammonium phosphate, urea, and sulfur-coated urea.

Available Phosphoric Acid and Soluble Potash - The percentages of P_2O_5 and K_2O are shown, along with the sources of the materials.

Other Plant Nutrients - Secondary plant nutrients and micronutrients are commonly included in fertilizers. In the example, other plant nutrients include 19% sulfur and 2% iron.

Net Weight

The total weight of fertilizer in the container is given.

BRAND NAME FERTILIZER

FERTILIZER
16-4-8

Guaranteed Analysis:

Total Nitrogen (N) 16.09%
4.0% Nitrate nitrogen
4.0% Ammoniacal nitrogen derived from ammonium phosphate
4.0% Water soluble nitrogen derived from Urea
4.0% Coated slow release or water insoluable Nitrogen
derived from sulfur coated urea or ureaform)

Available Phosphoric Acid (P_2O_5) .. 4.0% derived from ammonium phosphate
Soluble Potash (K_2O) 8.0%
Sulfur (S) ..... 19.0% expressed as elemental derived from sulfides and sulfates

Iron (Fe) ..... 2.0% derived from sulfides and sulfates

NET WEIGHT 50 LBS.

Figure 3-3. Sample fertilizer label

Composts and Organic Soil Amendments

Compost, peat moss, manure, straw, ground bark, sawdust, and other organic materials are commonly used to amend soils. These materials help to improve soil structure and water-holding capacity, but they don't change soil texture. Excessive amounts of high-carbon content organic materials added to the soil can lead to nitrogen deficiency problems because microbes that decompose carbon compete with plants for available nitrogen. This is less problematic when bark and similar materials are in large pieces and kept on the soil surface.

All organic material contains carbon. Plant tissues and livestock wastes contain large amounts of carbon. When carbon-containing materials are added to soil, microorganisms begin to feed upon (to decompose or break down) those materials. During the decomposition process, the microorganisms use nitrogen to form their proteins and other cellular materials. If the organic material being decomposed lacks sufficient nitrogen for the microorganisms, they will utilize other sources of soil nitrogen. The nitrogen utilized by the microorganisms will eventually be released back into the soil after the organic material is decomposed and the microorganisms die, but in the meantime, the nitrogen is unavailable for plant growth. This phenomenon is known as immobilization. Organic matter does not decompose well in soils that are too wet or too dry.

In a typical soil you might find that the ratio of carbon to nitrogen is 10:1. In other words, for every ten parts of carbon there is one part of nitrogen. Some woody materials, however, have carbon to nitrogen ratios of 400:1 or more. For microorganisms to decompose materials such as sawdust and straw, they will need supplementary nitrogen.

There are two methods of avoiding nitrogen depletion when using organic soil amendments. One method is to use fully decomposed organic materials in the first place. Peat moss is an example of a fully decomposed organic material. The peat cannot be broken down any further by soil microorganisms, so no additional nitrogen is needed for decomposition.

Composting is a controlled decomposition process in which manure and and/or plant residues are converted by microbial action into humus. The benefits of adding compost to a soil include improved soil structure, increased water holding capacity, improved nutrient availability, stabilized soil pH, suppression of plant diseases and increased soil microbial

activity. Composting partially breaks down organic materials and creates a product with a low C:N ratio. Well-composted materials generally have a C:N ratio around 10:1 or 12:1. Contact your cooperative extension service for information on composting home and garden waste.

The second method to prevent the depletion of soil nitrogen from the addition of high-carbon materials is to add supplemental nitrogen. If un-composted organic materials are used for soil amendments, you should add enough nitrogen at the same time to provide for decomposition. Generally speaking, add about 1 pound of actual nitrogen for each 100 pounds of undecomposed organic material. Weed seeds may also be present in uncomposted organic materials, especially in manures.

Review

A. Why is soil pH important in plant nutrition and fertilization? _____

_____

B. A customer's rhododendrons are sickly and stunted. The leaves are yellowish with dark green veins. No pathogens or pests are involved. What might be the problem and what short and long-term solutions would you recommend? _____

_____

C. A customer's vegetables show symptoms of phosphorus, potassium, and calcium deficiencies, even though he has applied fertilizer. What might be the problem and what would you recommend? _____

_____

D. What information does a fertilizer label give? _____

E. What are the differences between fertilizer grade and fertilizer ratio? _____

_____

Making Fertilizer Recommendations

Questions which customers frequently ask nursery salespeople include "What fertilizer should I apply?," "When should I apply it?," "How much should I apply?," and "How should I apply it?". Although each situation is different in terms of soil, plants, irrigation practices, mulching, and many other factors, there are valid rules of thumb that you can use to effectively respond to most of your clients' questions.

Many people are confused as to what is actually in the bag of fertilizer that they purchase. In the above section on fertilizer labels, we discussed fertilizer grades and analyses. Two 50-pound bags of fertilizers may look the same, but still contain very different products, which are designed for different uses.

For example, you have a 50-pound bag of 11-8-4 fertilizer. To calculate the actual nutrient content of the fertilizer, multiply the percentage of each nutrient by the total weight of the fertilizer. In the example, nitrogen makes up 11% of 50 pounds. Multiply 50 by 0.11 to find that the bag contains 5.5 pounds of actual nitrogen. Similarly, you will find that the bag contains 0.08 X 50 = 4.0 pounds of P_2O_5 and 0.04 X 50 = 2.0 pounds of K_2O.

Liquid fertilizers are treated in the same fashion, based on weight. If you have a gallon of liquid fertilizer (about 10 pounds) with a grade of 20-10-5, you should be able to determine that the product contains 2 pounds of nitrogen, 1 pound of P_2O_5, and 0.5 pounds of K_2O.

How Much Fertilizer Is Needed?

To make an accurate fertilizer recommendation, you need to know what the soil fertility and plant needs are to begin with. The most accurate methods of determining soil fertility and plant nutrient status involve laboratory analyses.

Soil analyses work well for turf, annuals, and other shallow-rooted plants. An analysis will tell you the concentrations of available nutrients in the soil. Because trees and shrubs have extensive root systems and store large amounts of nutrients in their tissues, soil tests, especially for nitrogen, aren't very helpful in predicting the fertilizer needs for these woody plants.

Early testing will allow you to determine the soil pH and choose appropriate plants to avoid future problems. Nutrient deficiencies are easier to correct before planting. Soil tests for N, P, K, pH, and organic matter are the ones most commonly recommended. Depending upon the soil type and history of the site, tests for Mg, S, B, Mn, or Zn may also be desirable.

For trees and shrubs, foliar tests provide the most accurate measure of nutrient status. Unfortunately, foliar nutrient standards are not available for most landscape plants. Most trees and shrubs are adapted to low levels of nitrogen; thus high rates are generally undesirable. Although judicious fertilization can increase growth and help maintain plant health, it is not always necessary or beneficial.

In most cases, nursery professionals make fertilizer recommendations based upon standard rates. The term "rate" simply means the amount of fertilizer or actual nutrient that is applied to a given area. For example, 2 pounds of actual nitrogen per 1000 square feet or 1 pound of 21-0-0 (ammonium sulfate) per 100 square feet are both rates. In the past some recommended rates were high "just to be on the safe side". Now moderate or low rates are more prudent. Excessive fertilization can be a major problem in landscapes and is responsible for many ground and surface water contamination problems. Be careful when making fertilizer recommendations based upon rates. Adjust rates for your area and the intended fertilizer use.

Once you know the amount of actual nutrient that you need for a particular application and want to determine how much fertilizer to apply, divide the amount of actual nutrient needed by the percentage of that nutrient in the fertilizer. If you need 2 pounds of actual nitrogen from a 15-4-4 fertilizer, divide 2.0 by 0.15 to find that 13.3 pounds of fertilizer are needed.

In making a fertilizer recommendation:

1. Determine how much actual nutrient you will need for a specified area or application. Suggested rates for turf, trees, and shrubs are given in the following sections.

2. Use the percentages of N, P, and K given on the fertilizer label and calculate the actual nutrient content, as described above.

3. Determine how much fertilizer product is needed to supply the suggested rate

The ingredients that supply the nutrients determine the costs and values per pound of fertilizer. Organic nitrogen sources are often more expensive than commercial inorganic materials because the concentration of nitrogen in the organic fertilizers are generally less. The lower the nutrient concentration (grade), the more fertilizer you must apply to get an equivalent plant response. This does not mean that organic products are inferior to conventional inorganic products; they simply provide different benefits. Similarly, slow-release inorganic fertilizers are generally more expensive than conventional inorganic materials, but may be more desirable for a particular customer's situation.

An organic mulch 2-3” deep in the drip zone of a tree can act as an alternative to fertilization and may gradually eliminate nutrient deficiencies. Mulch also increases soil microbial activity, which increases the availability of nutrients.

Fertilizing Turf

Timing

Properly timing fertilization helps to build carbohydrate reserves and stimulate root development in turf. Timing is not always the same, however, because warm-season and cool-season turf grasses differ in their growth patterns.

The major cool-season turf grasses, such as bluegrass, perennial ryegrass, and fescue, begin developing their root systems in the early spring. Another flush of root growth occurs in the fall. Fall nitrogen applications for these species increase carbohydrate reserves and root growth. Turf density is also increased through increased rhizome and stolon growth.

Both spring and summer fertilization are used to maintain the turf color and density and continue the benefits produced by fall fertilization the previous year. Don't overdo the spring and fall fertilization, however. Excessive fertilization leads to lush growth that is more susceptible to diseases and less tolerant of heat, drought, mowing, and foot traffic.

Rates

When you determine the annual nitrogen requirement for a turf, there are several things that you should consider, including the species and cultivars of grass present, length of the growing season, the turf quality desired, and the use of the turf area.

The fertilizer rate can be tailored to meet different quality expectations. Homeowners' expectations, for example, range from a moderately green, weed-free turf to a turf with excellent color and appearance.

The purpose of a turf also affects fertilizer practices. Nitrogen rates for bentgrass range from 2 to 7.5 pounds of actual N per 1000 square feet of turf per year. The lower rate may meet the low demands of a homeowner, while the higher rate may be needed to maintain a putting surface on golf greens.

Turf grass species and cultivars vary in their nitrogen requirements. Fescues (sheep, red, and hard) require a low level, Kentucky bluegrass a medium level, and bentgrass a high level of fertility. Suggested fertilizer rates per month of growing season are given in Table 3-2.

Cultural practices affect fertilization requirements. Increasing irrigation increases the amount of nitrogen that is leached out of the root zone. High losses of nitrogen should be expected when quick-release nitrogen sources are used on sandy soils. When using a quick-release source of nitrogen, such as ammonium nitrate or urea, a general rule apply no more than 1 pound of actual nitrogen per 1000 square feet at any one time during the spring and fall, and no more than 0.5 pounds of N per 1000 square feet during the summer. Using these rates should minimize leaching and the possibility of fertilizer burn. This adds up to a total of 2.5 lbs. of N for the growing season.

Up to 20% of the nitrogen that you apply to a lawn can be removed in grass clippings. If clippings are routinely removed from a lawn, more nitrogen fertilizer will be required to maintain high turf quality. As discussed in the turf chapter (Chapter 15) clippings are best left on the lawn.

Both phosphorus and potassium are required for plant growth and development. Potassium fertilization contributes to turf's general hardiness, and tempers the growth-stimulating effect of nitrogen. Traditionally, phosphorus and potassium have been applied with nitrogen in ratios of 3:1:2, 5:1:2, or 4:1:1 N, P, and K, respectively. These ratios approximate the ratio of N, P, and K in actual turf, but fail to take into account soil nutrient content. Phosphorus and potassium fertilization should be adjusted based upon soil analyses as many soils will require no amendment with P & K.

Table 3-2. Nitrogen fertilization recommendations for turf

Pounds of actual N per 1000 square feet per month of growing season

0.5 - 1.5 lbs	0.4 - 1.0 lbs
Kentucky Bluegrass	Zoysiagrass
Bermudagrass	Tall Fescue
Creeping Bentgrass	Perennial Ryegrass
	Annual Bluegrass
	Colonial Bentgrass
0.2 - 0.6 lbs	Velvet Bentgrass
Carpetgrass	
Red Fescue	0.0 - 0.4 lbs
Chewings Fescue	Blue Grama
	Buffalograss

Fertilizing Trees and Shrubs

Rates

Most fertilizer recommendations are based upon the size of the growing area for shrub beds or the branch spread for individual trees and shrubs, calculated as the drip line.

Fertilizer recommendations based upon trunk diameter can result in over-fertilization and plant damage if paved areas, foundation walls, or other obstructions restrict the root system.

One to four pounds of actual nitrogen per 1000 square feet per year will normally keep deciduous trees and shrubs healthy and vigorous. No fertilizer at all or the lowest rate is appropriate for slow growing, mature trees. Large, well-established trees have extensive root systems that draw nutrients from a large area and require little if any fertilizer. Two or three pounds of actual nitrogen per 1000 square feet would be a moderate rate appropriate for young, fast growing trees If leaf color, annual growth, or general vigor is unacceptable, you might recommend up to four pounds of N per 1000 square feet of ground under the branches. Generally the majority of the root area is located within 1.5 times the drip line. Rapid growth rate is generally undesirable in most trees, as it can lead to weak growth, poor winter hardiness, and increased susceptibility to insects and disease.

Broadleaf evergreens, small shrubs, flowering trees, and recently transplanted or declining trees are more sensitive to fertilizer salts than many other plants. These plants should receive only about one-half of the rates listed above, particularly when quick-release materials are applied. Splitting the recommended annual fertilizer rate into two or more applications can help to reduce damage to sensitive plants.

Timing

The recommended times to fertilize trees are in spring before growth begins, or in fall after the leaves have dropped. Do not fertilize in late summer as the resulting flush of growth will not have time to harden off before winter. Slow-release fertilizers, both inorganic and organic, remain in the root zone longer than soluble materials. The application timing for slow-release materials is less critical than for more soluble fertilizers.

Review

Make fertilizer recommendations for both the turf area and shade trees shown in Figure 3-4. Make the recommendations for a dry 34-0-0 and a dry 10-10-10 fertilizer. The turf is Kentucky bluegrass. The trees are 15-year old maples, showing signs of nutrient deficiency, each having a branch spread of 10 feet. Treat these as independent problems, i.e. there is no need to subtract the lawn fertilizer rate from the tree rate.

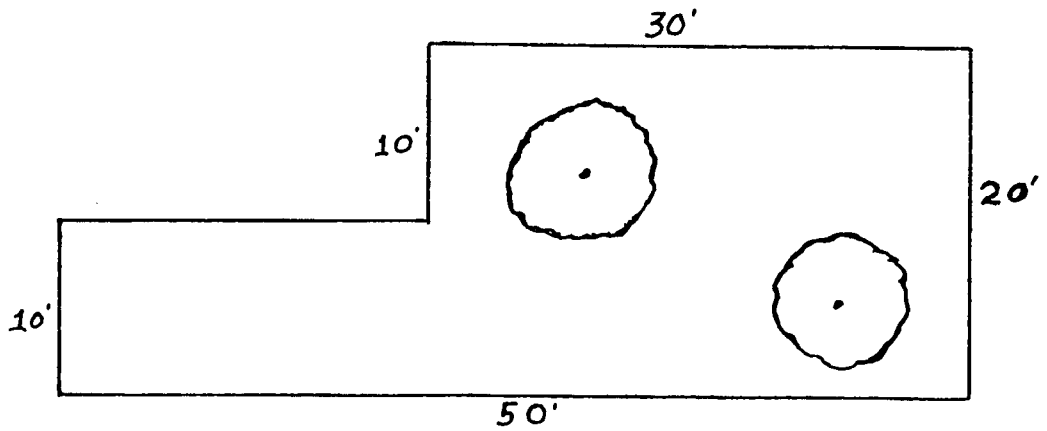

Figure 3-4.

A. Calculate the turf area: _____ = _____ square feet.

B. Total amount of nitrogen needed for the turf. Assume a 1.0 lb. rate per 1000 sq. ft.

_____ = _____ pounds of N.

C. Calculate the area under each tree: _____ = _____ square feet.

D. Total amount of nitrogen needed for each tree assuming 4.0 lb. rate per 1000 sq. ft.

_____ = _____ pounds of N.

E. Amount of 34-0-0 needed for turf area: _____ = _____ pounds of 34-0-0.

F. Amount of 10-10-10 needed for turf area: _____ = _____ pounds of 10-10-10.

G. Amount of 34-0-0 needed for each tree: _____ = _____ pounds of 34-0-0.

H. Amount of 10-10-10 needed for each tree: _____ = _____ pounds of 10-10-10.

I. When should the customer fertilize the lawn? _____

J. When should the trees be fertilized? _____

_____

Methods of Applying Fertilizers

Turf

Fertilizers can be applied in either dry or liquid forms. Research has shown that turf grass responds about the same to both dry and liquid applications of a material such as urea, making the selection of a particular nitrogen source a matter of choice.

Two types of spreaders are used to apply granular (dry) fertilizers: drop and broadcast. With a drop (gravity) spreader, fertilizer is held in a trough and agitated by a bar connected to the wheels. The fertilizer is dropped to the turf in defined swaths through a series of slots. This type of spreader can cause striping because of uneven application.

Professional turf grass managers commonly use the broadcast (centrifugal) spreader because it applies a wide swath of material and can be used to fertilize large areas quickly. This type of spreader has a hopper that feeds fertilizer through one or more holes onto a spinning disk. The motion of the disk propels the fertilizer in an arc of up to 180 degrees, from one side of the spreader to the other. Application is more uniform with broadcast spreaders.

For liquid fertilizer applications, fertilizers are either dissolved or suspended in water and sprayed on turf. From 1-5 gallons of water are used per 1000 square feet. Spray equipment can be broadly classified into either low-pressure spray booms or high-pressure (hydraulic) sprayers. Both types feature a tank, pump, pressure regulator, strainers or screens, and nozzles. Low-pressure spray booms operate at 15-60 pounds per square inch of pressure (psi) and deliver one gallon or less of spray per 1000 square feet. Attached to a vehicle, they are driven over large areas, delivering spray in distinct swaths through a series of nozzles. This type of sprayer is often used on golf fairways. High-pressure sprayers can generate several hundred pounds or more of pressure. Fertilizers are applied with a hose and hand-held nozzle in directed applications. Many lawn care companies use this type of spray equipment.

Trees and Shrubs

Fertilizers can be supplied to trees and shrubs using foliar sprays, trunk injections, or soil applications. Although foliar and trunk applications do have their advantages, soil applications are generally the most effective.

Nitrogen fertilizers can be applied to the soil surface, since nitrates are highly soluble and will move downward into the root zone. When trees are located in turf they generally receive adequate nutrients from the turf fertilization and don’t need additional fertilization.

When larger amounts of fertilizer are required, or when the above rate might cause excessive turf growth, nitrogen fertilizers can be placed below the grass root zone. Both drill-hole techniques and soil injection are used to place fertilizer below the soil surface. To calculate rates, divide the recommended rate for the specimen plant by the number of holes to be used, and apply that much fertilizer in each hole.

Drill-hole Technique - Drill a series of 3/4" to 1" diameter holes 18" to 24" apart and 12" to 18" deep away from the trunk and moving out as much as twice the drip line of the tree. For trees whose trunks are more than 6" in diameter, begin the holes 2 or 3 feet from the trunk. To make filling the holes easier, remove a grass plug from each hole before digging. Place the calculated amount of fertilizer in each hole; making sure the top of the fertilizer is at least 4" below the soil surface. Fill the holes with soil or grass plugs. Fertilizer spikes are also applied, whole or broken, in this manner.

Soil Injection - Soil injection is a fast, economical alternative to the drill-hole technique. For commercial applications, a hydraulic sprayer operated at 50-200 psi and an injector probe is used. The injector is inserted into the soil approximately 12". Applications are made in a grid pattern with holes about three feet apart, beginning a few feet away from the trunk and working out beyond the drip line, as described above.

Soil injection is up to 75% faster than the drill-hole technique and can provide more thorough nutrient distribution. Soluble fertilizers are more likely to burn roots, however, and can quickly leach out of the root zone. Injected soluble nitrogen may remain in the root zone for as little as six weeks.

Trunk injection of fertilizers is used in certain cases to apply micronutrients. This method is not appropriate for applications of N, P, or K. It is a costly procedure and the tree is wounded in the process. Small holes are bored into the vascular system of the tree and then liquid fertilizer is injected. Only certified arborists should perform trunk injections.

Summary

Plants need certain nutrients in order to grow and develop properly. Seventeen elements are presently known to be essential for plant growth and development. Carbon, oxygen, hydrogen, nitrogen, phosphorus potassium, calcium, magnesium, and sulfur are required by plants in relatively large amounts, and are referred to as macronutrients. Iron, manganese, zinc, boron, copper, molybdenum, and chlorine are required in trace amounts, and are referred to as micronutrients. Regardless of the amount required by plants, each of these elements is equally important for proper growth and development.

Of the essential elements, plants obtain carbon, oxygen, and hydrogen through air and water. These elements seldom limit plant growth. All other nutrients are normally obtained from the soil, fertilizers, or dissolved salts in irrigation and rainwater.

The lack of any nutrient will affect plant growth. Deficiency symptoms often include stunting, discoloration, malformed leaves and stems, necrosis (tissue death), and reduced flowering and fruiting. Although nutrient deficiencies can be diagnosed through visual symptoms, effective diagnosis requires extensive general experience and specific knowledge of the site, plants, and cultural practices involved. Pests, diseases, heat, drought, and other stresses can also cause visual symptoms resembling those caused by nutrient deficiencies.

To effectively recommend fertilizers, you must have a basic knowledge of plant nutrition and fertilizers.

The basic components of a "complete" macronutrient fertilizer are N, P, and K. A 100-pound sack of 11-8-6 contains 25 pounds of actual plant food. Of that 25 pounds, 11 are made up of nitrogen, 8 of available phosphorus (P_2O_5), and 6 of available potassium (K_2O). Some fertilizers may not contain each of these nutrients, while others may include N, P, K, and other essential elements, including micronutrients. Properly choosing a fertilizer is important if it is to give desired results.

Proper application is also important for effective fertilization. Techniques vary from uniform applications over large areas for turf and planting beds to drill holes and soil injection for individual trees and shrubs.

Fertilizers come in both dry and liquid formulations, depending upon the form of the fertilizer used. Properly selecting and calibrating application equipment is essential for effective fertilization.

References

Fertilizer primer: terminology, calculations, and application - CIS 863. R. Mahler and R. McDole. 1990. University of Idaho, Agricultural Communications Center, Moscow, ID 83843.

Soil sampling - Bulletin No. 704. R. Mahler and R. McDole. 1989. University of Idaho, Agricultural Communications Center, Moscow, ID 83843.

Western garden book. 1988. Sunset Publishing Corp. Menlo Park, CA.

Western fertilizer handbook - 7th ed. 1985. The California Fertilizer Association. Sacremento, CA.

Chapter Review

A. Increased turf fertilization can cause what potential problems?

_____

_____

B. When a plant appears to be nutrient deficient what more common causes should be considered and mitigate first?

_____

_____

C. Do mature trees need frequent fertilization? Why or why not.

_____

_____

D. Which element is most commonly limiting in plant growth?

_____

_____

E. What nutrients become unavailable to plants when the soil pH is too high?

_____

_____

F. What nutrient is normally added to organic matter when making compost? Why is it added?

_____

_____

G. Describe the differences between drop spreaders and broadcast spreaders for fertilizing turf.

_____

_____

H. Describe the four methods of applying fertilizer to shrubs and trees.

1. _____

2. _____

3. _____

4. _____

I. For a lawn, should all of the fertilizer be applied at the same time? Give your recommendations.

_____

_____